USER'S MANUAL

Star RF10
Star RF20

Proximity Card Reader

Rev.5.4.0

IDTECK

Table of Contents

1. Important Safety Instructions 3
2. General 3
3. Features 4
4. Specification 4
5. Identifying Supplied Parts 4
6. Installation of the Product 5
7. Color Coded & Wiring Table 6
8. Wire Connection to Controller 6
9. Operation 7
10. FCC Registration Information 8
11. Warranty and Service 9

1. Important Safety Instructions

When using Proximity Card Reader, basic safety precautions should always be followed to reduce the risk of fire, electrical shock, and injury to persons. In addition, the following safety guides should also be followed:

1. Fully read and understand all instructions and follow them completely.
2. Follow all warnings and instructions marked on the product.
3. Do not use liquid or aerosol cleaners. Use a damp cloth for cleaning. If necessary, use mild soap.
4. Do not use this product near water.
5. Only operate this product using the type of power source indicated. If you are not sure of the type of power supplied to your installation site, consult your dealer of local power company.
6. Never insert objects of any kind into the product or through the cabinet slots as they may touch voltage points and/or short circuit parts possibly resulting in fire or electric shock.
   Never spill liquid of any kind on the product.
7. Never disassemble this product by yourself; take the unit to a qualified service center whenever service or repair is required. Opening or removing the covers may expose you to dangerous voltages or other risks. Also, incorrect reassembly can cause electric shock when the unit is subsequently used.
8. Unplug this product from the Direct Current (DC) power source and refer to qualified service personnel under these conditions:
   a. When the power supply cord or plug is damaged or frayed.
   b. If liquid has been spilled on the product.
   c. If the product does not operate normally after following the operating instructions in this manual. Adjust only those controls that are covered by the operating instructions in this manual. Improper adjustment of other controls that are not covered by this manual may damage the unit and will often require extensive work by a qualified technician to restore normal operation.
   d. If the product exhibits a distinct change in performance.

2. General

The STAR RF-10 / RF-20 is an elegant looking and an attractive 4" read range proximity reader which can be mounted to metal door frame(mullion) or any flat wall surface. The STAR RF-10 / RF-20 use the same electronics module in epoxy potting that ensure you successful operation even in harsh environments.
The different bezels allow you to interchange the bezel for different applications or wall conditions.
Two color LED of green and red, inside Piezo buzzer sound will guarantee you an accurate and reliable system operations.

3. Features

- Read Range: Up to 4” (10cm)
- Wiegand , RS232(Optional), ABA Track II magnetic stripe(Optional) format available
- Metal door frame, mullion (RF10, RF-TINY) and wall mount (RF20)
- PSK modulation
- Solid Epoxy potted
- 100% Weather Proof
- Dual reading tech reader / Active and Passive
- Reverse power polarity protection
- User format available
- Supervisory signal(optional)

4. Specification

Read Range / Time	Up to 4” (10cm) / 30ms
Power	DC 5V ~ 12V, Max.180mA
Output Format	26 Bit Wiegand, RS232C, ABA Track II
External Buzzer control Input	Low Active, DC 0 ~ 12V, Max. 50mA
External LED control Input	Low Active, DC 0 ~ 12V, Max. 50mA
LED/ Buzzer	2 Color LED(Red and Green) / Piezo Buzzer
Color	Dark Pearl Gray
Operating Environment	-31°F ~ 149°F(-35°C ~ +65°C), 0~90% Humidity
Dimensions(WxHxD)	RF-10: 1.82"x4.81"x0.87"(46x122x23mm) RF-20: 3.00"x4.89"x0.87"(76x124x23.5mm
Weight	0.35lb(160g)

5. Identifying Supplied Parts

Please unpack and check the contents of the box.

Reader Module
(1 ea)

RF-10 Bezel
(1 ea)

or

RF-20 Bezel
(1 ea)

User’s Manual
(1 ea)

6. Installation of the Product

6-1. Mullion/Wall Mount

Drill two 6-32 or M3 holes 3.3"(8.38cm) apart in vertical and drill one 1/2" hole for the reader cable 1.7"(4.31cm) apart from the top hole.
(If you have installed electric gang box then skip this step.)

6-2. Put reader cable into the center hole and install the reader module by using two 6-32 or M3 screws.

6-3. Put bezel into the reader module then push bezel until you hear the locking sound.

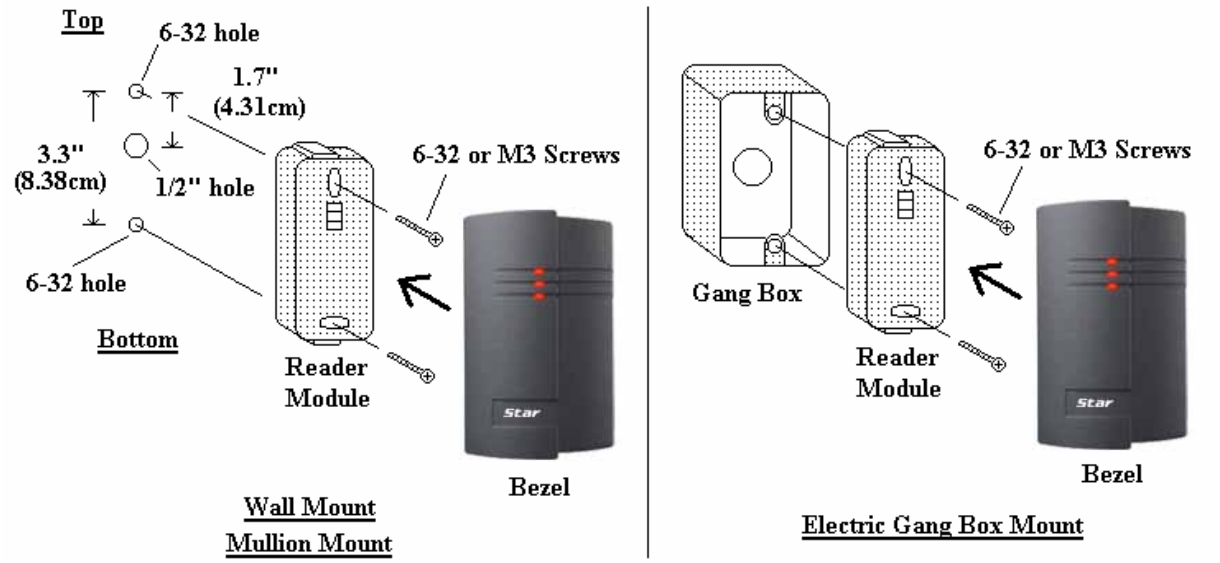

7. Color Coded & Wiring Table

POWER		
Power(DC +5V~+17V) DC(+)	Red wire	
Power(DC Ground)	DC(-)(GND)	Black wire
INPUT		
Buzzer control input	BUZZER	Blue wire
LED control input	LED	Yellow wire
OUTPUT(Wiegand Format)		
Wiegand Data-0	Data-0	Green wire
Wiegand Data-1	Data-1	White wire
OUTPUT(ABA Track II Format)		
ABA(Card Present)	CP	Orange wire
ABA(Clock)	CLK	White wire
ABA(DATA)	Data	Green wire
OUTPUT(RS232C Format)		
RS232C(TX)	TX	Violet wire

8. Wire Connection to Controller

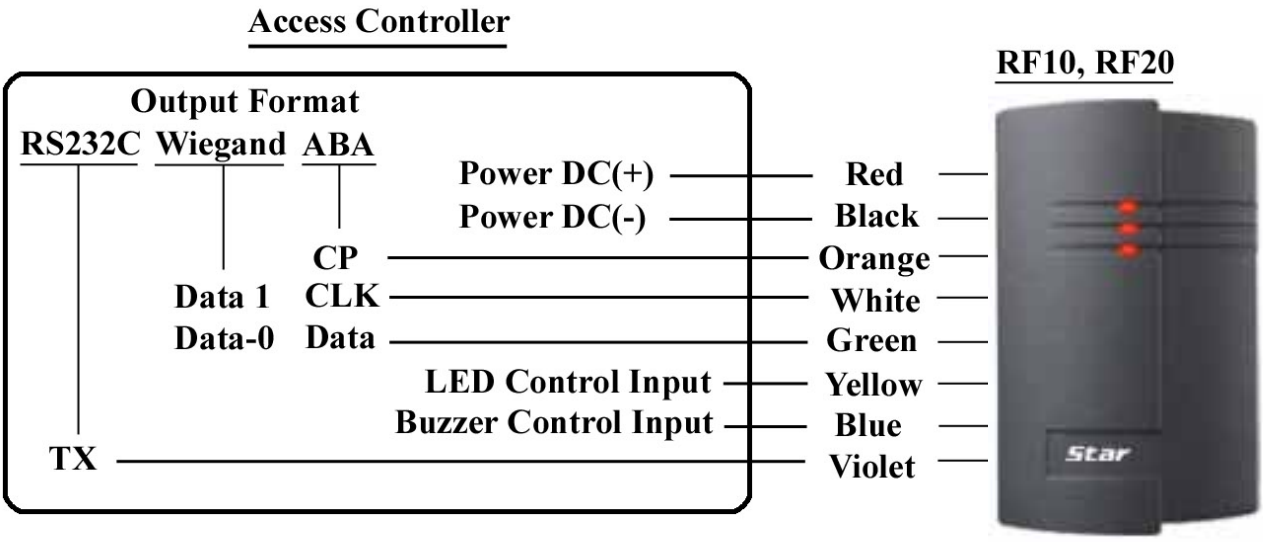

Wire Connection to Controller

9. Operation

9-1. Apply power and you can see Red LED is on indicating the reader is in standby.

9-2. Present proximity card to the reader until you hear beep sound and the LED is changing the color to Green simultaneously and the reader send RF card data to the controller then LED changes the color to Red again for next reading.

9-3. LED Control

To change the LED colors, you may connect LED Control Input(Yellow wire) to power ground then the Green LED is on indicating the reader is in standby. Present proximity card then the LED changes the color to Red simultaneously then Green again for next reading.

9-4. Buzzer Control

When the reader reads proximity card, only one beep sound generates in normal operating mode but you can generate more beep sounds to distinguish whether the access is granted or denied.

To generate more beeps, you may control the Buzzer Control Input(Blue wire) to power ground then you can turn beeper on while you hold Buzzer Control Input to power ground.

10. FCC Registration Information

FCC REQUIREMENTS PART 15

Caution: Any changes or modifications in construction of this device which are not expressly approved by the responsible for compliance could void the user's authority to operate the equipment.

NOTE: This device complies with Part 15 of the FCC Rules.

Operation is subject to the following two conditions;

1. This device may not cause harmful interface, and
2. This device must accept any interference received, including interference that may cause undesired operation.

This equipment has been tested and found to comply with the limits for a Class B Digital Device, pursuant to Part 15 of the FCC Rules. These limits are designed to this equipment generates, uses, and can radiate radio frequency energy and, if not installed and used in accordance with the instructions, may cause harmful interference to radio communications.
However, there is no guarantee that interference will not occur in a particular installation. If this equipment does cause harmful interference to radio or television reception, which can be determined by turning the radio or television off and on, the user is encouraged to try to correct interference by one or more of the following measures.

1. Reorient or relocate the receiving antenna.
2. Increase the separation between the equipment and receiver.
3. Connect the equipment into an outlet on another circuit.
4. Consult the dealer or an experienced radio/TV technician for help.

11. Warranty and Service

The following warranty and service information applies only to the United States of America and Republic of Korea. For the information in other countries, please contact your local distributor.
To obtain in or out of warranty service, please prepay shipment and return the unit to the appropriate facility listed below.

IN THE UNITED STATES

RF LOGICS Inc. Service Center
Headquarters and Western Region
370 Amapola Ave, #106
Torrance, CA 90501
Phone: (310) 782-8383
Fax: (310) 782-8298
E-mail: rflogics@rflogics.com
Web-site: www.rflogics.com

OUTSIDE OF THE UNITED STATES

IDTECK CO., LTD. Service Center
5F Ace Techno Tower Bldg.,
684-1 Deungchon-dong, Gangsuh-gu,
SEOUL 157-030, KOREA
Tel.: +82 (2) 2659-0055
Fax.: +82 (2)2 659-0086
E-mail: webmaster@idteck.com
Web-site: www.idteck.com

Please use the original container, or pack the unit(s) in a sturdy carton with sufficient packing to prevent damage, include the following information:
1. A proof-of-purchase indicating model number and date of purchase.
2. Bill-to address
3. Ship-to address
4. Number and description of units shipped.
5. Name and telephone number of person to contact.
6. Reason for return and description of the problem.

NOTE: Damage occurring during shipment is deemed the responsibility of the carrier, and claims should be made directly to the carrier.

MEMO

MEMO

The specification contained in this manual are subject to change without notice at any time

5F, Ace Techno Tower B/D, 684-1, Deungchon-Dong,
Gangseo-Gu, Seoul, 157-030, Korea
Tel : (82) 2 2659-0055
Fax : (82) 2 2659-0086
E-mail : webmaster@idteck.com

Copyright © IDTECK Co., Ltd.